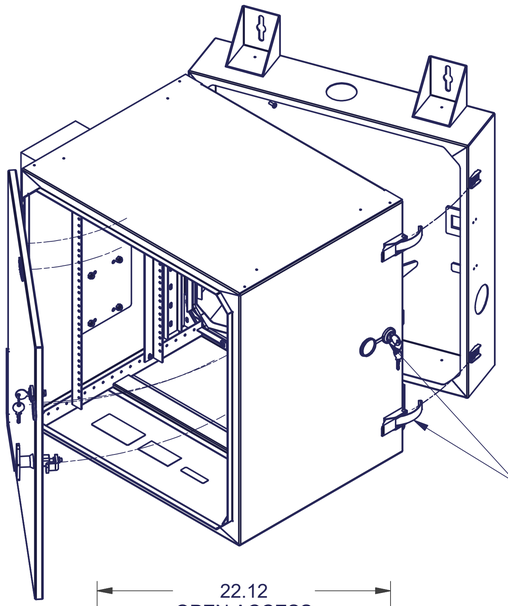

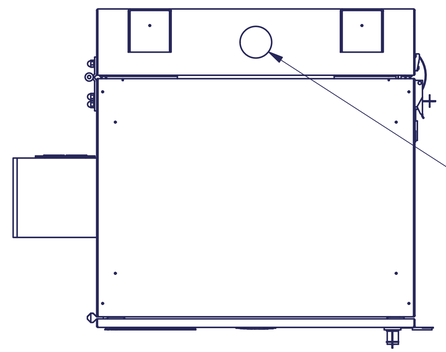

TOP VIEW

CENTER SECTION SECURED BY
OVER-CENTER LATCHES AND A
KEY-LOCKING LATCH w/ DUST COVER

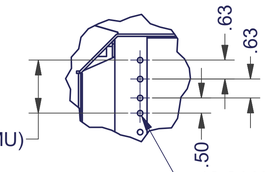

DETAIL D

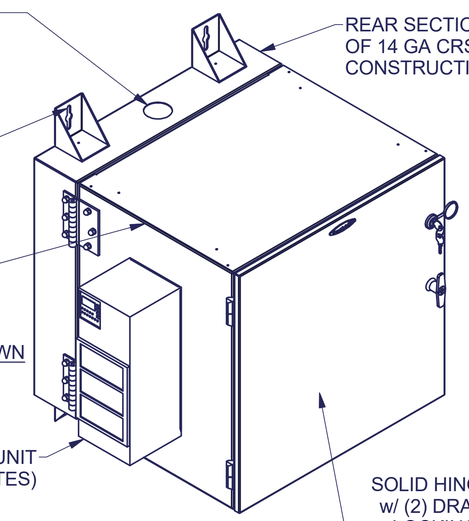

ISO VIEW - A/C VERSION SHOWN
(NOT-REVERSIBLE)

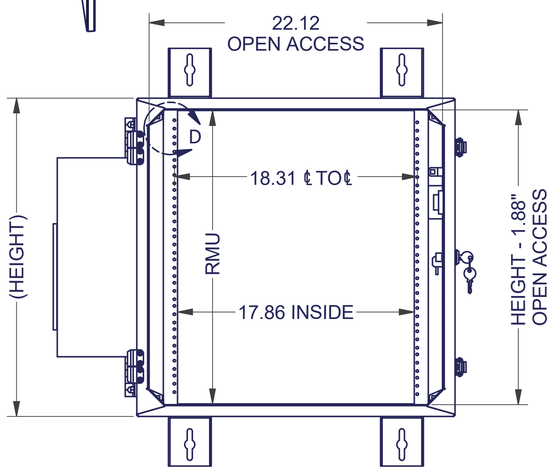

FRONT VIEW
(DOOR REMOVED)

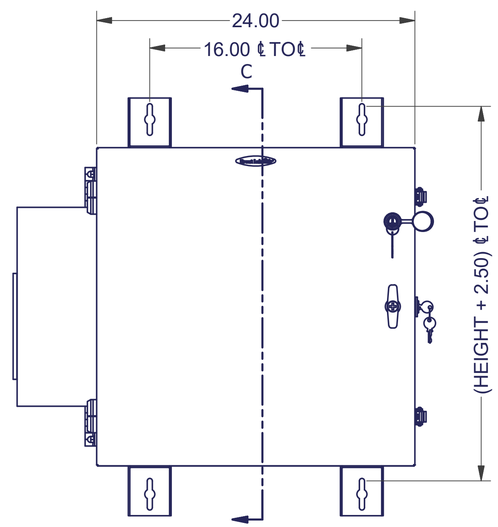

FRONT VIEW

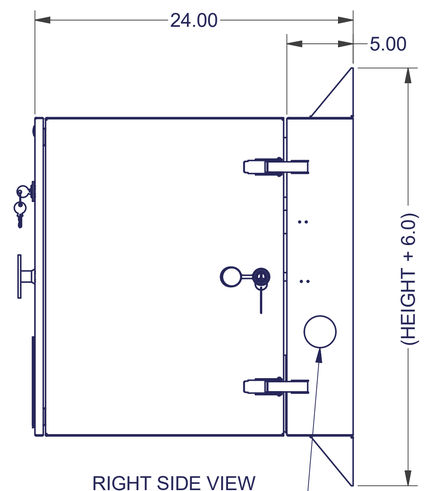

RIGHT SIDE VIEW

REAR TOP CABLE ACCESS
FOR 2" NOMINAL CONDUIT
(Ø2.469 ACTUAL HOLE SIZE)

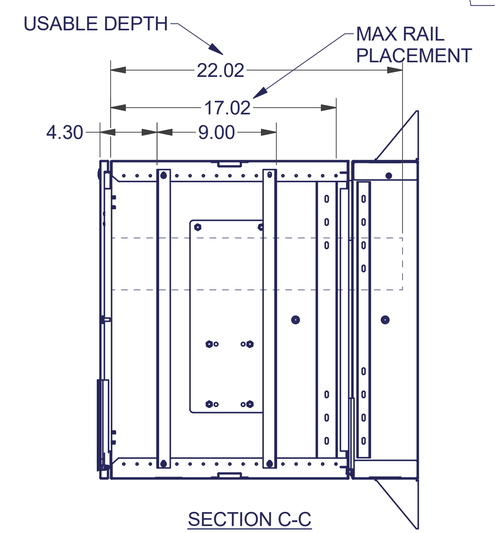

SECTION C-C

SPECIFICATIONS: NEMA-12K WALL MOUNT

RATING: INDEPENDENTLY TESTED & CERTIFIED, NEMA-250-1997 TYPE 12.
UL508A Listed
RACK SPACES: 19" EIA 310-E COMPLIANT -SEE CHART FOR RMU
COLOR: DURABLE BLACK TEXTURED POWDER COAT
CONSTRUCTION: 2 PAIR OF #12-24 THREADED MOUNTING RAILS,#12GA
#14GA CENTER BODY, #16GA FRONT DOOR
ACCEPTS 2" CONDUIT SIZES FOR CABLE ACCESS
FRONT DOOR & REAR SECTION LOCK INDEPENDENTLY.
USABLE DEPTH: 22.0"

Table

PART NUMBER	HEIGHT	RMU	WEIGHT CAP	COLOR	COOLING
GL24N12-24-B-AC10	24.0"	12	125 lb	BLACK	1000 BTU OPTION
GL24N12-24-B-AC13	24.0"	12	125 lb	BLACK	1300 BTU OPTION
GL36N12-24-B-AC10	36.0"	19	225 lb	BLACK	1000 BTU OPTION
GL36N12-24-B-AC13	36.0"	19	225 lb	BLACK	1300 BTU OPTION
GL48N12-24-B-AC22	48.0"	26	265 lb	BLACK	2200 BTU OPTION

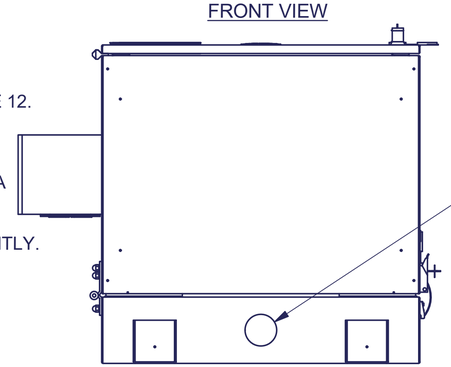

BOTTOM VIEW

NOTES:

1. A/C UNITS ARE NOT FACTORY INSTALLED. SHIPPED SEPARATELY.
2. A/C UNITS ARE TO BE INSTALLED ON HINGE SIDE ONLY AS SHOWN.
3. COMPLETE WALLMOUNT UNIT IS NOT REVERSIBLE.
4. A/C UNITS ARE AVAILABLE IN DIFFERENT BTU, SEE CHART.
5. STANDARD VOLTAGE 120V/60Hz.

EST. WEIGHT : N/A

THIRD ANGLE PROJECTION

INTERPRET DRAWING PER ASME Y14.5M-1994
DIMENSIONAL LIMITS APPLY AFTER APPLICATION OF FINISH
DRAWING NOT TO SCALE
TOLERANCE UNLESS OTHERWISE NOTED:
ANGULAR +/- 1°
.XXXX +/- .010
.XXX +/- .015
.XX +/- .030
.X FOR REF. ONLY
UNLESS OTHERWISE SPECIFIED ALL DIMENSIONS ARE IN INCHES

NOTICE:

Use of this document is subject to a confidentiality and nondisclosure agreement with Great Lakes Data Racks and Cabinets and may not be reproduced, disclosed or utilized in whole or in part without prior written authorization.

PART NUMBER: GLXXN12-24-B-XXXX
MATERIAL TYPE:
MATERIAL GAUGE:
FINISH:
DRAWN CDM DATE 6/4/2014
CHECKED & APP. DATE

TITLE: N12K SERIES ("A/C" VERSION)

GREAT LAKES DATA RACKS AND CABINETS
P.O. BOX 551 EDINBORO, PA 16412
PHONE (814) 734-7303 FAX (814) 734-3907
E-MAIL glcc@greatcabinets.com

DWG NO: N12AC
REV 0
SHEET: 1 OF 1